TELTONIKA | Networks

RUT955

www.comms365.com / 01234 865880

Copyright © 2021, TELTONIKA NETWORKS. Specifications and information given in this document are subject to change by TELTONIKA NETWORKS without prior notice.

HARDWARE

FRONT VIEW

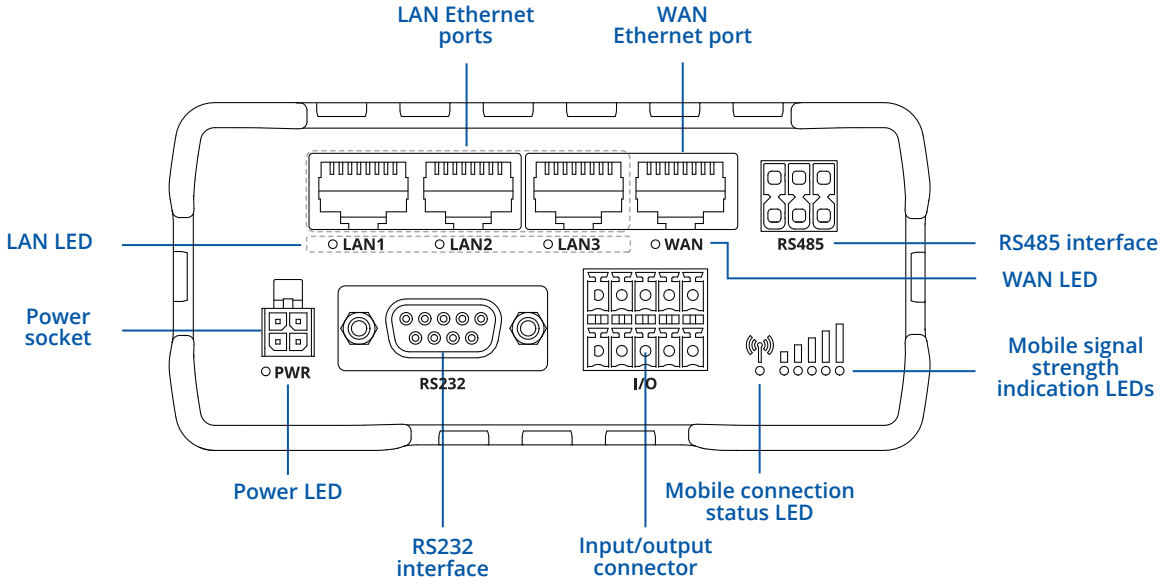

BACK VIEW

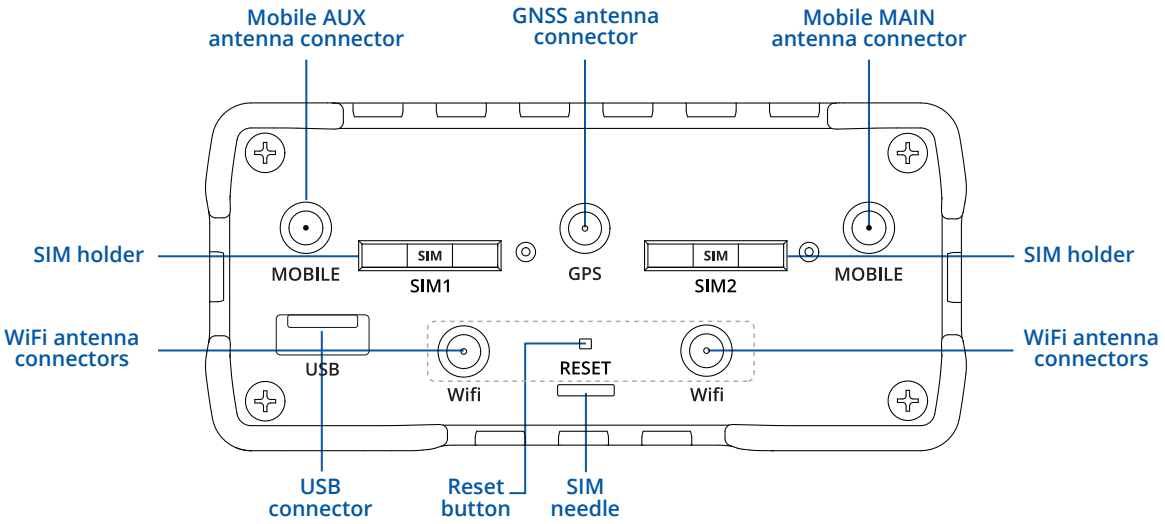

POWER SOCKET PINOUT

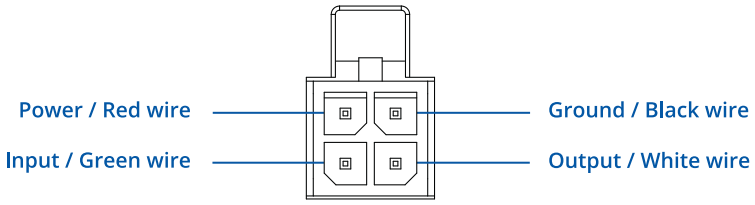

Copyright © 2021, TELTONIKA NETWORKS. Specifications and information given in this document are subject to change by TELTONIKA NETWORKS without prior notice.

FEATURES

MOBILE

Mobile module	4G (LTE) – Cat 4 up to 150 Mbps, 3G – Up to 42 Mbps, 2G – Up to 236.8 kbps
SIM switch	2 SIM cards, auto-switch cases: weak signal, data limit, SMS limit, roaming, no network, network denied, data connection fail, SIM idle protection
Status	Signal strength (RSSI), SINR, RSRP, RSRQ, EC/IO, RSCP, Bytes sent/received, connected band, IMSI, ICCID
SMS	SMS status, SMS configuration, send/read SMS via HTTP POST/GET, EMAIL to SMS, SMS to EMAIL, SMS to HTTP, SMS to SMS, scheduled SMS, SMS autoreply, SMPP
Black/White list	Operator black/white list
Band management	Band lock, Used band status display
APN	Auto APN
Bridge	Direct connection (bridge) between mobile ISP and device on LAN
Passthrough	Router assigns its mobile WAN IP address to another device on LAN
Multiple PDN (optional)	Possibility to use different PDNs for multiple network access and services (not available in standard FW)

WIRELESS

Wireless mode	IEEE 802.11b/g/n, Access Point (AP), Station (STA)
WiFi security	WPA2-Enterprise - PEAP, WPA2-PSK, WEP, WPA-EAP, WPA-PSK; AES-CCMP, TKIP, Auto Cipher modes, client separation
SSID	SSID stealth mode and access control based on MAC address
WiFi users	up to 100 simultaneous connections
Wireless Hotspot	Captive portal (Hotspot), internal/external Radius server, built in customizable landing page

NETWORK

Routing	Static routing, Dynamic routing (BGP, OSPF v2, RIP v1/v2)
Network protocols	TCP, UDP, IPv4, IPv6, ICMP, NTP, DNS, HTTP, HTTPS, FTP, SMTP, SSL v3, TLS, ARP, VRRP, PPP, PPPoE, UPNP, SSH, DHCP, Telnet, SMPP, MQTT, Wake On Lan (WOL)
VoIP passthrough support	H.323 and SIP-alg protocol NAT helpers, allowing proper routing of VoIP packets
Connection monitoring	Ping Reboot, Wget Reboot, Periodic Reboot, LCP and ICMP for link inspection
Firewall	Port forward, traffic rules, custom rules
DHCP	Static and dynamic IP allocation, DHCP Relay, Relayd
QoS / Smart Queue Management (SQM)	Traffic priority queuing by source/destination, service, protocol or port, WMM, 802.11e
DDNS	Supported >25 service providers, others can be configured manually
Network backup	VRRP, Mobile, Wired and WiFi WAN options, each of which can be used as backup, using automatic Failover
Load balancing	Balance your internet traffic over multiple WAN connections
SSHFS (optional)	Possibility to mount remote file system via SSH protocol (not available in standard FW)

SECURITY

Authentication	Pre-shared key, digital certificates, X.509 certificates
Firewall	Pre-configured firewall rules can be enabled via web-ui, unlimited firewall configuration via CLI; DMZ; NAT; NAT-T
Attack prevention	DDOS prevention (SYN flood protection, SSH attack prevention, HTTP/HTTPS attack prevention), port scan prevention (SYN-FIN, SYN-RST, X-mas, NULL flags, FIN scan attacks)
VLAN	Port and tag based VLAN separation
Mobile quota control	Set up custom data limits for both SIM cards
WEB filter	Blacklist for blocking out unwanted websites, whitelist for specifying allowed sites only
Access control	Flexible access control of TCP, UDP, ICMP packets, MAC address filter

Copyright © 2021, TELTONIKA NETWORKS. Specifications and information given in this document are subject to change by TELTONIKA NETWORKS without prior notice.

ETHERNET

WAN	1 x WAN port (can be configured to LAN) 10/100 Mbps, compliance IEEE 802.3, IEEE 802.3u standards, supports auto MDI/MDIX
LAN	3 x LAN ports, 10/100 Mbps, compliance IEEE 802.3, IEEE 802.3u standards, supports auto MDI/MDIX

VPN

OpenVPN	Multiple clients and server can be running simultaneously, 12 encryption methods
OpenVPN Encryption	DES-CBC, RC2-CBC, DES-EDE-CBC, DES-EDE3-CBC, DESX-CBC, BF-CBC, RC2-40-CBC, CAST5-CBC, RC2-64-CBC, AES-128-CBC, AES-192-CBC, AES-256-CBC
IPsec	IKEv1, IKEv2, supports up to 4 x VPN IPsec tunnels (instances), with 5 encryption methods (DES, 3DES, AES128, AES192, AES256)
GRE	GRE tunnel
PPTP, L2TP	Client/Server services can run simultaneously
Stunnel	Proxy designed to add TLS encryption functionality to existing clients and servers without any changes in the programs' code
DMVPN	Method of building scalable IPsec VPNs
SSTP	SSTP client instance support
ZeroTier	ZeroTier VPN
WireGuard	WireGuard VPN client and server support

MODBUS TCP SLAVE

ID range	Respond to one ID in range [1;255] or any
Allow Remote Access	Allow access through WAN
Custom registers	Modbus TCP custom register block requests, which read/write to a file inside the router, and can be used to extend Modbus TCP Slave functionality

MODBUS TCP MASTER

Supported functions	01, 02, 03, 04, 05, 06, 15, 16
Supported data formats	8 bit: INT, UINT; 16 bit: INT, UINT (MSB or LSB first); 32 bit: float, INT, UINT (ABCD (big-endian), DCBA (little-endian), CDAB, BADC)

MODBUS RTU MASTER (RS232)

Supported baud rates	From 300 to 115200
Supported functions	01, 02, 03, 04, 05, 06, 15, 16
Number of data bits	From 5 to 8
Number of stop bits	1 or 2
Parity	None, Even, Odd
Flow	None, RTS/CTS, Xon/Xoff
Duplex	Full duplex

MODBUS RTU MASTER (RS485)

Supported baud rates	From 300 to 115200
Supported functions	01, 02, 03, 04, 05, 06, 15, 16
Number of data bits	8
Number of stop bits	1
Parity	None, Even, Odd
Flow	None, Xon/Xoff
Duplex	Half duplex

MODBUS DATA TO SERVER

Protocol	HTTP(S), MQTT, Azure MQTT

Copyright © 2021, TELTONIKA NETWORKS. Specifications and information given in this document are subject to change by TELTONIKA NETWORKS without prior notice.

MQTT GATEWAY

MQTT gateway	Allows sending commands and receiving data from Modbus Master through MQTT broker

MONITORING & MANAGEMENT

WEB UI	HTTP/HTTPS, status, configuration, FW update, CLI, troubleshoot, event log, system log, kernel log
FOTA	Firmware update from server, automatic notification
SSH	SSH (v1, v2)
SMS	SMS status, SMS configuration, send/read SMS via HTTP POST/GET
CALL	Reboot, Status, WiFi on/off, Mobile data on/off, Output on/off, answer/hang-up with a timer
TR-069	OpenACS, EasyCwmp, ACSLite, tGem, LibreACS, GenieACS, FreeACS, LibCWMP, Friendly tech, AVSystem
MQTT	MQTT Broker, MQTT publisher
SNMP	SNMP (v1, v2, v3), SNMP trap
JSON-RPC	Management API over HTTP/HTTPS
MODBUS	MODBUS TCP status/control
RMS	Teltonika Remote Management System (RMS)

IoT PLATFORMS

Clouds of things	Allows monitoring of: Device data, Mobile data, Network info, Availability
ThingWorx	Allows monitoring of: WAN Type, WAN IP Mobile Operator Name, Mobile Signal Strength, Mobile Network Type
Cumulocity	Allows monitoring of: Device Model, Revision and Serial Number, Mobile Cell ID, ICCID, IMEI, Connection Type, Operator, Signal Strength, WAN Type and IP
Azure IoT Hub	Can send device IP, Number of bytes send/received/ 3G connection state, Network link state, IMEI, ICCID, Model, Manufacturer, Serial, Revision, IMSI, Sim State, PIN state, GSM signal, WCDMA RSCP WCDMA EC/IO, LTE RSRP, LTE SINR, LTE RSRQ, CELL ID, Operator, Operator number, Connection type, Temperature, PIN count to Azure IoT Hub server

SYSTEM CHARACTERISTICS

CPU	Atheros Wasp, MIPS 74Kc, 550 MHz
RAM	128 MB, DDR2
FLASH storage	16 MB, SPI Flash

FIRMWARE / CONFIGURATION

WEB UI	Update FW from file, check FW on server, configuration profiles, configuration backup, restore point
FOTA	Update FW/configuration from server
RMS	Update FW/configuration for multiple devices
Keep settings	Update FW without losing current configuration

FIRMWARE CUSTOMIZATION

Operating system	RutOS (OpenWrt based Linux OS)
Supported languages	Busybox shell, Lua, C, C++
Development tools	SDK package with build environment provided

SERIAL

RS232	DB9 connector, full RS232 (with RTS, CTS)
RS485	RS485 Full Duplex (4 wires) and Half Duplex (2 wires). 300-115200 baud rate
Serial functions	Console, Serial over IP, Modem, Modbus gateway, NTRIP Client

Copyright © 2021, TELTONIKA NETWORKS. Specifications and information given in this document are subject to change by TELTONIKA NETWORKS without prior notice.

LOCATION TRACKING

GNSS	GPS, GLONASS, BeiDou, Galileo and QZSS
Coordinates	GNSS coordinates via WebUI, SMS, TAVL, RMS
NMEA	NMEA 0183
NTRIP	NTRIP protocol (Networked Transport of RTCM via Internet Protocol)
Server software	Supported server software TAVL, RMS
Geofencing	Configurable multiple geofence zones

INPUT/OUTPUT

Input	1 x digital input (0 - 3 V), 1 x digital galvanically isolated input (0 - 30 V), 1 x analog input (0 - 24 V), 1 x Digital non-isolated input (on 4 pin power connector)
Output	1 x digital open collector output (30 V, 250 mA), 1 x SPST relay output (40 V, 4 A), 1 x Digital open collector output (30 V, 300 mA, on 4 pin power connector)
Events	SMS, EMAIL, RMS

USB

Data rate	USB 2.0
Applications	Samba share, USB-to-serial
External devices	Possibility to connect external HDD, flash drive, additional modem, printer
Storage formats	FAT, FAT32, NTFS

SD CARD

Physical size	Micro SD
Applications	Samba share
Capacity	Up to 32 GB

POWER

Connector	4 pin industrial DC power socket
Input voltage range	9 – 30 VDC reverse polarity protection; surge protection >31 VDC 10us max
PoE (passive)	Passive PoE over spare pairs. Possibility to power up through LAN port, not compatible with IEEE802.3af, 802.3at and 802.3bt standards
Power consumption	< 2 W idle, < 7 W Max

PHYSICAL INTERFACES (PORTS, LEDS, ANTENNAS, BUTTONS, SIM)

Ethernet	4 x RJ45 ports, 10/100 Mbps
I/O's	2 x Inputs and 2 x Outputs on 10 pin industrial socket, 1 x Digital input and 1 x Digital output on 4 pin power connector (available from HW revision 1600)
Status LEDs	1 x bi-color connection status LED, 5 x connection strength LEDs, 4 x LAN status LEDs, 1 x Power LED
SIM	2 x SIM slots (Mini SIM - 2FF), 1.8 V/3 V, external SIM holders, eSIM (Optional)
Power	1 x 4 pin power connector
Input/output	1x 10 pin industrial socket for inputs/outputs
Antennas	2 x SMA for LTE, 2 x RP-SMA for WiFi, 1 x SMA for GNSS
USB	1 x USB A port for external devices
SD card	Micro SD card slot
RS232	1 x DB9 socket
RS485	1 x 6 pin industrial socket
Reset	Reboot/User default reset/Factory reset button

Copyright © 2021, TELTONIKA NETWORKS. Specifications and information given in this document are subject to change by TELTONIKA NETWORKS without prior notice.

PHYSICAL SPECIFICATION

Casing material	Aluminium housing, plastic panels
Dimensions (W x H x D)	110 x 50 x 100 mm
Weight	287 g
Mounting options	DIN rail (can be mounted on two sides), flat surface placement

OPERATING ENVIRONMENT

Operating temperature	-40 °C to 75 °C
Operating humidity	10% to 90% non-condensing
Ingress Protection Rating	IP30

REGULATORY & TYPE APPROVALS

Regulatory	CE/RED, FCC, IC/ISED, EAC, RCM, PTCRB, RoHS, WEEE, Wi-Fi Alliance CE/RED, FCC, IC, PTCRB, RCM, EAC, CCC, RoHS, WEEE, IP rating, Anatel, GCF, REACH, E-mark, DNV GL, ECE Regulation 118, Morocco ANRT, Thailand NBTC, Ukraine UCRF, SDPPI (POSTEL), WiFi Certified, Modbus Conformance
Operator	AT&T, Verizon
Regulatory	ECE R10 (E-mark) ECE R118

EMI IMMUNITY

Standards	Draft EN 301 489-1 V2.2.0, Draft EN 301 489-17 V3.2.0, Draft EN 301 489-19 V2.1.0, Draft EN 301 489-52 V1.1.0 FCC 47 CFR Part 15B (2017), ANSI C63.4 (2014)
ESD	EN61000-4-2:2009
RS	EN 61000-4-3:2006 + A1:2008 + A2:2010
EFT	EN 61000-4-4:2012
Surge immunity (AC Power Line)	EN 61000-4-5:2006
Surge immunity (Ethernet ports)	EN 61000-4-5:2014, clause 7.1 of ITU-T K21
Transient and surges	ISO 7632-2:2004
CS	EN 61000-4-6:2009
DIP	EN 61000-4-11:2004

RF

Standards	EN 300 328 V2.1.1, EN 301 511 V12.5.1, EN 301 908-1 V11.1.1, EN 301 908-2 V11.1.1, EN 301 908-13 V11.1.1, EN 303 413 V1.1.0 AS/CA S042.1:2018, AS/ACIF S042.3:2005, AS/CA S042.4:2018, AS/NZS 4268:2017 FCC 47 CFR Part 15C (2017), FCC 47 CFR Part 2 (2017), FCC 47 CFR Part 22H (2017), FCC 47 CFR Part 24E (2017), FCC 47 CFR Part 27C (2017) RSS-Gen Issue 4 (2014), RSS-247 Issue 2 (2017), RSS-132 Issue 3 (2013), RSS-133 Issue 6 (2013), RSS-139 Issue 3, RSS-130 Issue 1

SAFETY

Standards	IEC 60950-1:2005 (Second Edition) + Am 1:2009 + Am 2:2013 AS/NZS 60950.1:2015 EN 50665:2017, EN 62311:2008 FCC 47 CFR Part 1 1.1310 RSS-102 Issue 5 (2015)

ENVIRONMENTAL

Ingress Protect	LST EN 60529:1999+A1+AC:2002
Vibration	Class guideline-DNVGL-CG-0339:2016 EN 60068-2-6:2008

Copyright © 2021, TELTONIKA NETWORKS. Specifications and information given in this document are subject to change by TELTONIKA NETWORKS without prior notice.

HARDWARE INSTALLATION

1. Push the SIM holder button with the SIM needle.
2. Pull out the SIM holder.
3. Insert your SIM card into the SIM holder.
4. Slide the SIM holder back into the router.
5. Attach all antennas.
6. Connect the power adapter to the socket on the front of the device. Then plug the other end of the power adapter into a power outlet.
7. Connect to the device wirelessly using SSID and password provided on the device information label or use an Ethernet cable connected to LAN port.

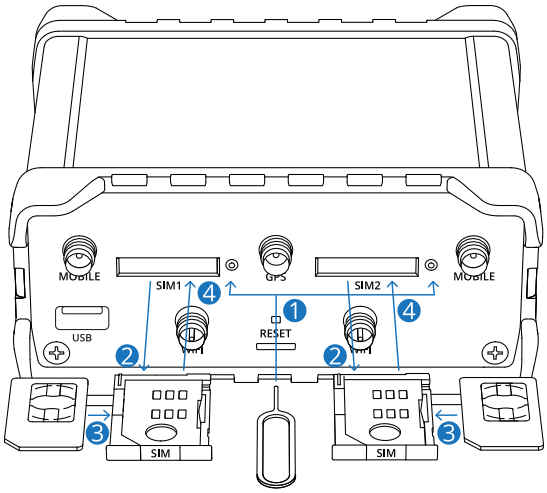

LOGIN TO DEVICE

1. To enter the router's Web interface (WebUI), type http://192.168.1.1 into the URL field of your Internet browser.
2. Use login information shown in image A when prompted for authentication.
3. After you log in, you will be prompted to change your password for security reasons. The new password must contain at least 8 characters, including at least one uppercase letter, one lowercase letter, and one digit. This step is mandatory, and **you will not be able to interact with the router's WebUI before you change the password.**
4. When you change the router's password, the Configuration Wizard will start. The Configuration Wizard is a tool used to set up some of the router's main operating parameters.
5. Go to the Overview page and pay attention to the Signal Strength indication (image B). To maximize the cellular performance try adjusting the antennas or changing the location of your device to achieve the best signal conditions.

A.

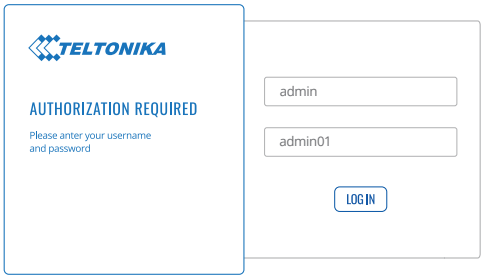

B.

TECHNICAL INFORMATION

Radio specifications	
RF technologies	2G, 3G, 4G, WiFi, GNSS
Max RF power	33 dBm@GSM, 24 dBm@WCDMA, 23 dBm@LTE, 20 dBm@ WiFi
	Bundled accessories specifications*
Power adapter	Input: 0.4A@100-240VAC, Output: 9VDC, 1A, 4-pin plug
Mobile antenna	698~960/1710~2690 MHz, 50 Ω, VSWR<3, gain** 3 dBi, omnidirectional, SMA male connector
WiFi antenna	2400~2483.5 MHz, 50 Ω, VSWR<2, gain** 5 dBi, omnidirectional, RP-SMA male connector
GNSS antenna	1575.42~1602 MHz, 2.2~5 VDC, VSWR<1.5, gain** 28 dB (typ.), RHCP polarization, SMA male connector

*Order code dependent.
**Higher gain antenna can be connected to compensate for cable attenuation when a cable is used. The user is responsible for the compliance with the legal regulations.

Copyright © 2021, TELTONIKA NETWORKS. Specifications and information given in this document are subject to change by TELTONIKA NETWORKS without prior notice.

WHAT'S IN THE BOX?

STANDARD PACKAGE CONTAINS*

- Router RUT955
- 9 W PSU
- 2 x LTE antennas (magnetic mount, SMA male, 3 m cable)
- 2 x WiFi antennas (magnetic mount, RP-SMA male, 1.5 m cable)
- GNSS antenna (adhesive , SMA male, 3 m cable)
- RS485 connector block
- I/O connector block
- Ethernet cable (1.5 m)
- SIM Adapter kit
- RMS Flyer
- QSG (Quick Start Guide)
- Packaging box

ROUTER RUT955	9 W PSU	2 X LTE ANTENNAS (MAGNETIC MOUNT, SMA MALE, 3 M CABLE)
2 X WIFI ANTENNAS (MAGNETIC MOUNT, RP-SMA MALE, 1.5 M CABLE)	GNSS ANTENNA (ADHESIVE , SMA MALE, 3 M CABLE)	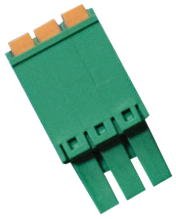 RS485 CONNECTOR BLOCK
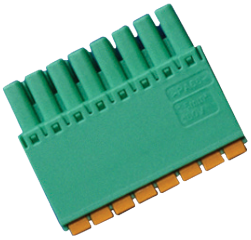 I/O CONNECTOR BLOCK	ETHERNET CABLE (1.5 M)	SIM ADAPTER KIT

* For all standard order codes standard package contents are the same, execpt for PSU.

Copyright © 2021, TELTONIKA NETWORKS. Specifications and information given in this document are subject to change by TELTONIKA NETWORKS without prior notice.

STANDARD ORDER CODES

PRODUCT CODE	HS CODE	HTS CODE	PACKAGE CONTAINS
RUT955 T033B0	851762	8517.62.00	Standard package with Euro PSU
RUT955 K034S0	851762	8517.62.00	Standard package with US PSU
RUT955 J034S0	851762	8517.62.00	Standard package with US PSU
RUT955 W03660	851762	8517.62.00	Standard package with US PSU

For more information on all available packaging options – please contact us directly.

AVAILABLE VERSIONS

PRODUCT CODE	REGION (OPERATOR)	FREQUENCY
RUT955 0*****	Europe, the Middle East, Africa	• 4G (LTE-FDD): B1, B3, B5, B7, B8, B20 • 4G (LTE-TDD): B40 • 3G: B1, B5, B8 • 2G: B3, B8
RUT955 T*****	Europe, the Middle East, Africa, Korea, Thailand, India, Malaysia	• 4G (LTE-FDD): B1, B3, B7, B8, B20, B28A • 4G (LTE-TDD): B38, B40, B41 • 3G: B1, B8 • 2G: B3, B8
RUT955 H*****	Europe, the Middle East, Africa, Korea, Thailand, India, Malaysia	• 4G (LTE-FDD): B1, B3, B5, B7, B8, B20 • 4G (LTE-TDD): B38, B40, B41 • 3G: B1, B5, B8 • 2G: B3, B8
RUT955 J*****	North America (AT&T, Bell, T-Mobile)[1]	• 4G (LTE-FDD): B2, B4, B12 • 3G: B2, B4, B5
RUT955 K*****	North America (Verizon)	• 4G (LTE-FDD): B4, B13
RUT955 W*****	North America (AT&T/ Verizon/ T-mobile)	• 4G (LTE-FDD): B2/B4/B5/B12/B13/B14/B66/B71 • WCDMA: B2/B4/B5
RUT955 M*****	South America, Australia, New Zealand, Taiwan	• 4G (LTE-FDD): B1, B2, B3, B4, B5, B7, B8, B28 • 4G (LTE-TDD): B40 • 3G: B1, B2, B5, B8 • 2G: B2, B3, B5, B8
RUT955 P*****	Japan	• 4G (LTE-FDD): B1, B3, B8, B18, B19, B26 • 4G (LTE-TDD): B41 • 3G: B1, B6, B8, B19
RUT955 V*****	Global	• 4G (LTE-FDD): B1, B2, B3, B4, B5, B7, B8, B12, B13, B18, B19, B20, B25, B26, B28 • 4G (LTE-TDD): B38, B39, B40, B41 • 3G: B1, B2, B4, B5, B6, B8, B19 • 2G: B2, B3, B5, B8
RUT955 Z*****	Europe, the Middle East, Africa, Korea, Thailand	• 4G (LTE-FDD): B1, B3, B7, B8, B20, B28A • 4G (LTE-TDD): B38, B40, B41 • 3G: B1, B8 • 2G: B3, B8

The price and lead-times for region (operator) specific versions may vary. For more information please contact us.
1 - Router is not certified on Bell, T-Mobile network.

Copyright © 2021, TELTONIKA NETWORKS. Specifications and information given in this document are subject to change by TELTONIKA NETWORKS without prior notice.

MOUNTING OPTIONS

DIN RAIL KIT

Parameter	Value
Mounting standard	35mm DIN Rail
Material	Low carbon steel
Weight	57g
Screws included	Philips Pan Head screw #6-32×3/16, 2pcs
Dimensions	82 mm x 46 mm x 20 mm
RoHS Compliant	V

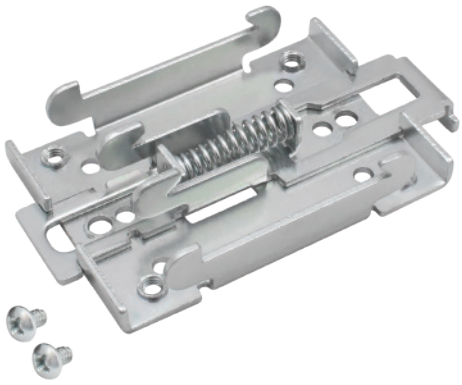

DIN RAIL KIT

- DIN Rail adapter
- Philips Pan Head screw #6-32×3/16, 2pcs for RUT2xx/RUT9xx

ORDER CODE	HS CODE	HTS CODE
PR5MEC00	73269098	7326.90.98

For more information on all available packaging options – please contact us directly.

COMPACT DIN RAIL KIT

Parameter	Value
Mounting standard	35mm DIN Rail
Material	ABS + PC plastic
Weight	6.5 g
Screws included	Philips Pan Head screw #6-32×3/16, 2pcs
Dimensions	70 mm x 25 mm x 14,5 mm
RoHS Compliant	V

DIN RAIL KIT

- Compact plastic DIN Rail adapter (70x25x14,5mm)
- Philips Pan Head screw #6-32×3/16, 2pcs

ORDER CODE	HS CODE	HTS CODE
PR5MEC11	73269098	7326.90.98

For more information on all available packaging options – please contact us directly.

SURFACE MOUNTING KIT

Parameter	Value
Mounting standard	Flat surface mount
Material	ABS + PC plastic
Weight	2x5 g
Screws included	Philips Pan Head screw #6-32×3/16, 2pcs
Dimensions	25 mm x 48 mm x 7.5 mm
RoHS Compliant	V

DIN RAIL KIT

- Surface mounting kit
- Philips Pan Head screw #6-32×3/16, 2pcs

ORDER CODE	HS CODE	HTS CODE
PR5MEC12	73269098	7326.90.98

For more information on all available packaging options – please contact us directly.

Copyright © 2021, TELTONIKA NETWORKS. Specifications and information given in this document are subject to change by TELTONIKA NETWORKS without prior notice.

RUT955 SPATIAL MEASUREMENTS & WEIGHT

MAIN MEASUREMENTS

W x H x D dimensions for RUT955:

Device housing*:	110 x 50 x 100
Box:	355 x 60 x 175

*Housing measurements are presented without antenna connectors and screws; for measurements of other device elements look to the sections below.

TOP VIEW

The figure below depicts the measurements of RUT955 and its components as seen from the top:

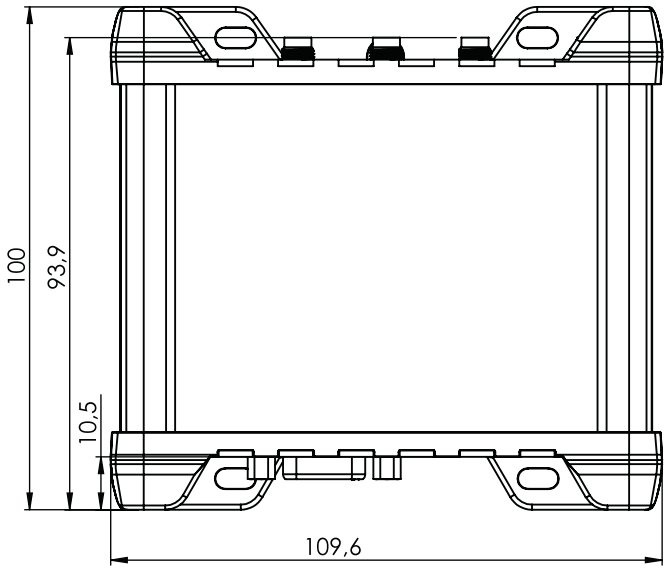

RIGHT VIEW

The figure below depicts the measurements of RUT955 and its components as seen from the right side:

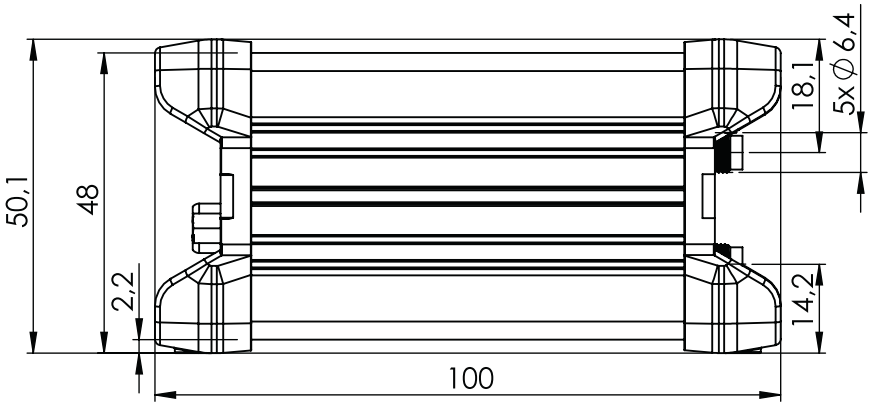

Copyright © 2021, TELTONIKA NETWORKS. Specifications and information given in this document are subject to change by TELTONIKA NETWORKS without prior notice.

FRONT VIEW

The figure below depicts the measurements of RUT955 and its components as seen from the front panel side:

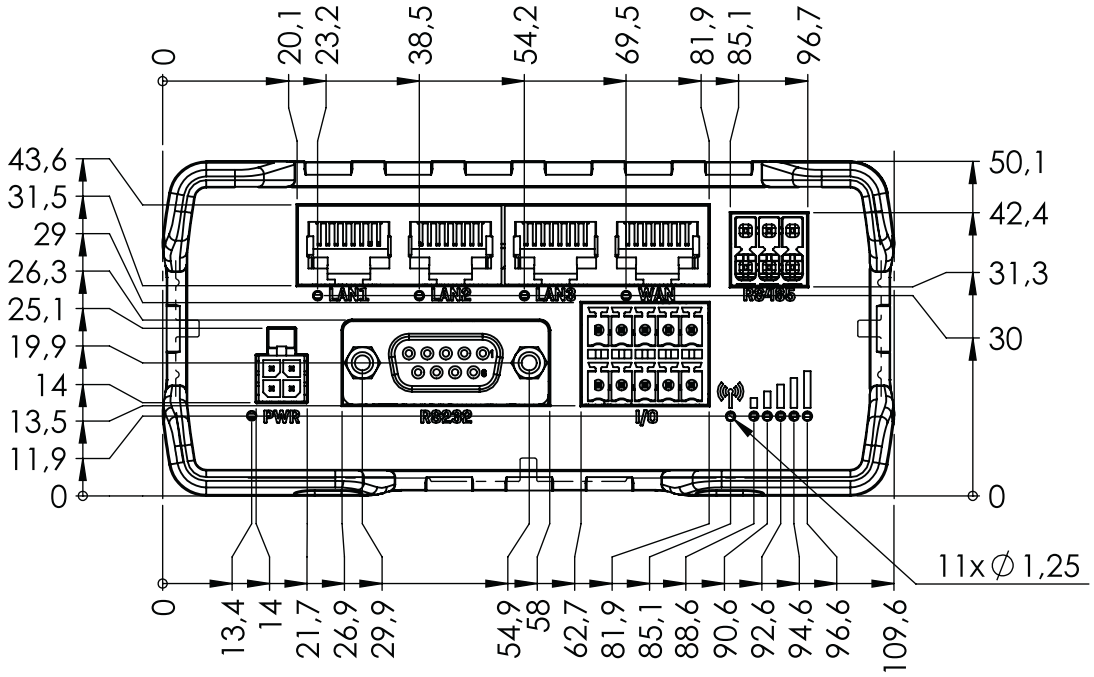

REAR VIEW

The figure below depicts the measurements of RUT955 and its components as seen from the back panel side:

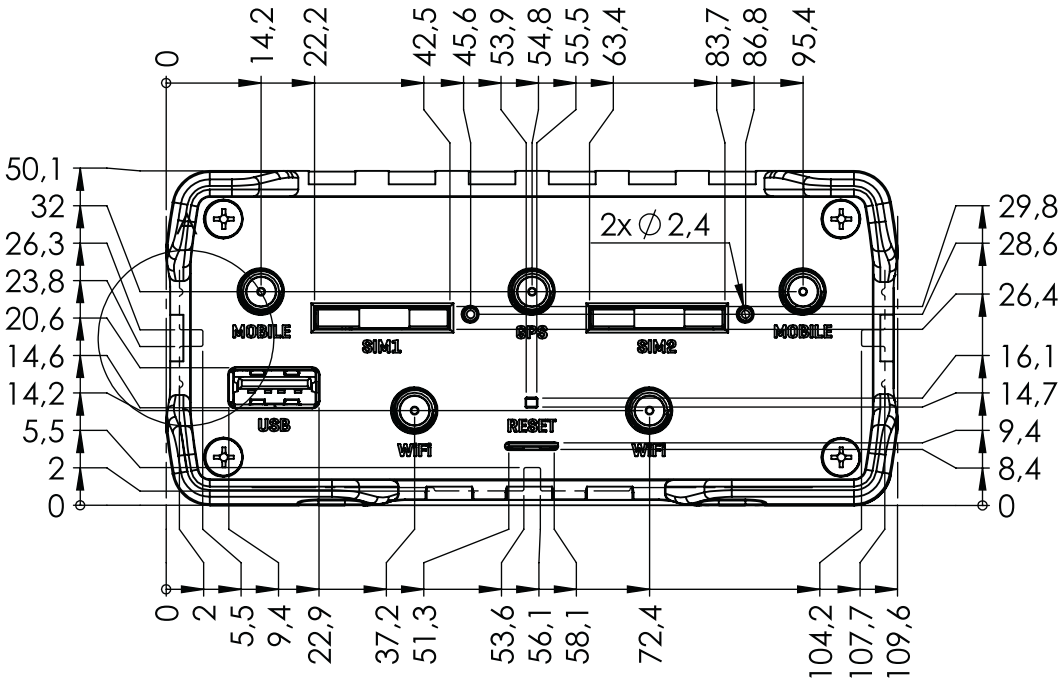

Copyright © 2021, TELTONIKA NETWORKS. Specifications and information given in this document are subject to change by TELTONIKA NETWORKS without prior notice.

MOUNTING SPACE REQUIREMENTS

The figure below depicts an approximation of the device's dimensions when cables and antennas are attached:

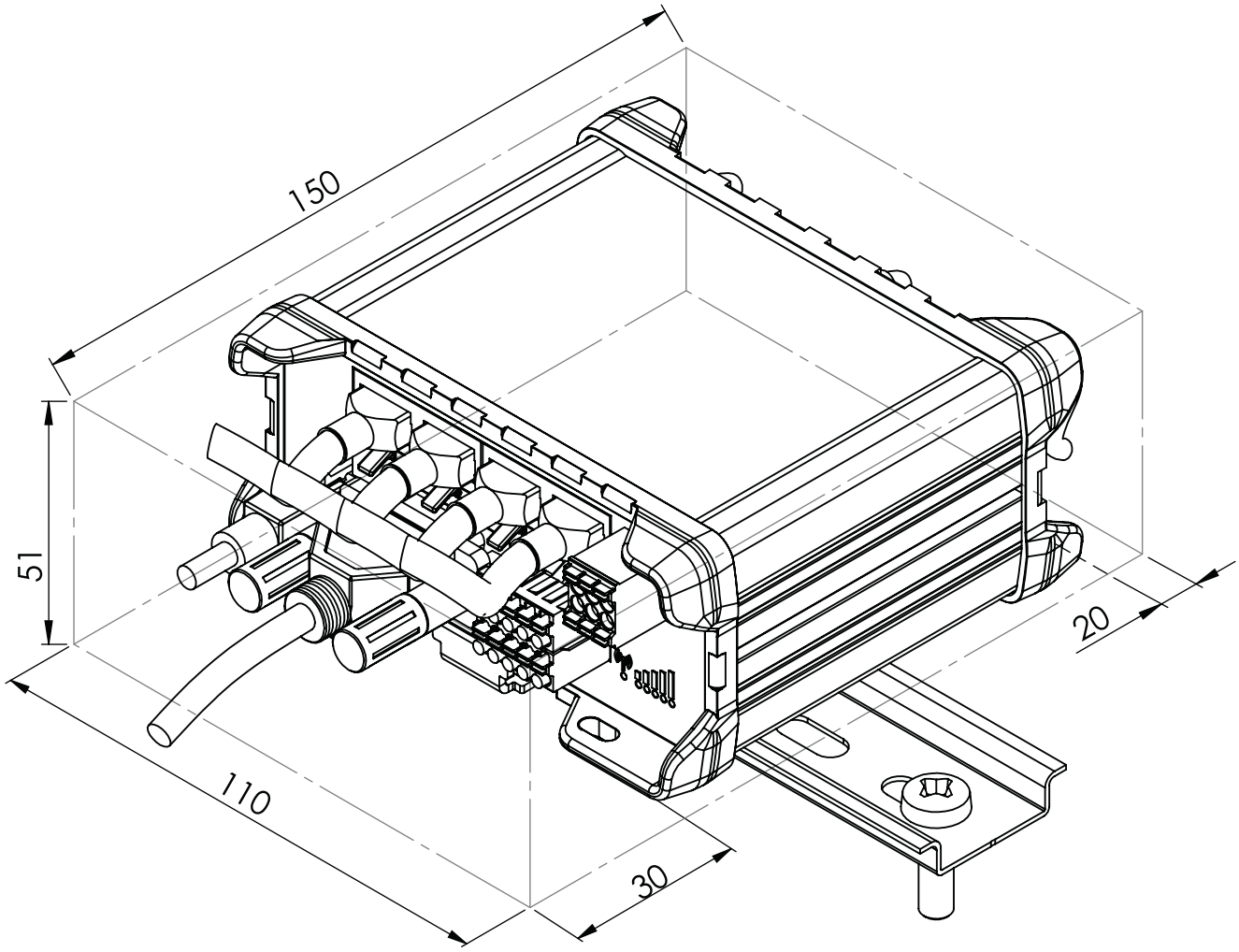

Copyright © 2021, TELTONIKA NETWORKS. Specifications and information given in this document are subject to change by TELTONIKA NETWORKS without prior notice.

DIN RAIL

The scheme below depicts protrusion measurements of an attached DIN Rail:

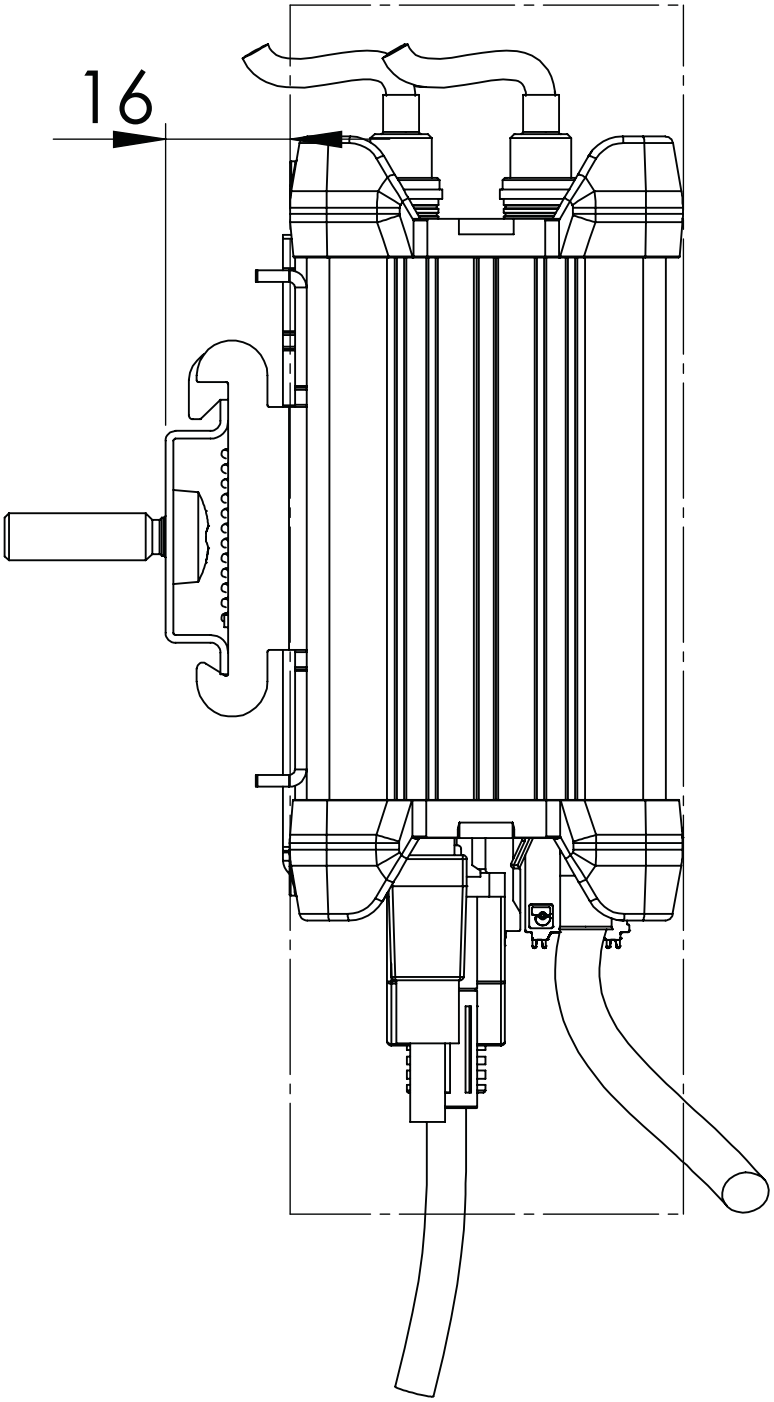

Copyright © 2021, TELTONIKA NETWORKS. Specifications and information given in this document are subject to change by TELTONIKA NETWORKS without prior notice.